MasterGrain

16566 HIGHWAY 12 PO BOX 399 MIDLAND, ONTARIO, CANADA

SMOOTH SKIN SERIES FIBERGLASS OPAQUE SINGLE DOOR

INSWING/OUTSWING "IMPACT"

L F Schmidt

L. F. SCHMIDT LICENSE No. 43409 STATE OF FLORIDA PROFESSIONAL ENGINEER

Digitally signed by Lyndon F Schmidt
Date: 2023.07.03 09:38:26 -04'00'

This item has been digitally signed and sealed by **L. F. Schmidt, P.E.** on the date adjacent to the seal.

Printed copies of this document are not considered signed and sealed and the signature must be verified on any electronic copies.

THIS PRODUCT APPROVAL IS VALID ONLY FOR THE STATE OF FLORIDA

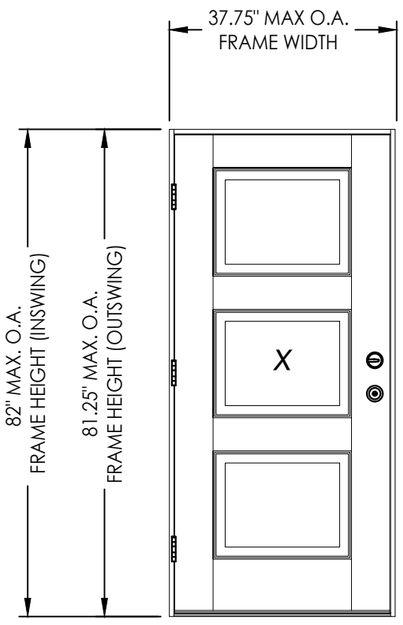

GENERAL NOTES

1. This product has been evaluated and is in compliance with the 8th Edition (2023) Florida Building Code (FBC) structural requirements excluding the "High Velocity Hurricane Zone" (HVHZ).
2. Product anchors shall be as listed and spaced as shown on details. Anchor embedment to base material shall be beyond wall dressing or stucco.
3. When used in areas requiring wind borne debris protection this product complies with FBC Sections 1609.1.2 & R301.2.1.2 and does not require an impact resistant covering. This product meets missile level "D" and includes Wind Zone 4 as defined in ASTM E1996 and FBC Sections 1609.1.2.2 & R301.2.1.2.1.
4. For 2x stud framing construction, anchoring of these units shall be the same as that shown for 2x buck masonry construction.
5. Site conditions that deviate from the details of this drawing require further engineering analysis by a licensed engineer or registered architect.

TABLE OF CONTENTS

SHEET #	DESCRIPTION
1	Typical Elevations, Design Pressures & General Notes
2	Door Panel Details
3	Elevation
4	Horizontal & Vertical Cross Sections (2X Buck)
5	Horizontal & Vertical Cross Sections (1X Buck)
6	Vertical Cross Sections (Thresholds)
7	Buck & Frame Anchoring
8	Hardware Details
9	Bill of Materials & Components

CONFIGURATION	DESIGN PRESSURE (PSF) INSWING		DESIGN PRESSURE (PSF) OUTSWING	
	POSITIVE	NEGATIVE	POSITIVE	NEGATIVE
X	+80.0	-90.0	+80.0	-80.0

Documents Prepared By:
Lyndon F. Schmidt
P.E. No. 43409
RW BUILDING CONSULTANTS, INC.
P.O. Box 230, Valrico, FL 33595
Phone No.: 813.659.9197
FBPE Registry No. 9813

PRODUCT: MASTERGRAIN FIBERGLASS DOOR

PART OR ASSEMBLY: TYPICAL ELEVATION, DESIGN PRESSURES & GENERAL NOTES

REVISIONS

NO.	DATE		BY
3	7/01/23	UPDATE TO 8TH ED. (2023) FBC	LFS
2	7/08/20	UPDATE TO 7TH ED. (2020) FBC	LFS
1	10/03/17	UPDATE TO 6TH ED. (2017) FBC	JK

DATE: 02/09/17
SCALE: N.T.S.
DWG. BY: JK
CHK. BY: LFS
DRAWING NO.: FL-21852.17
SHEET 1 OF 9

© 2017 R.W. Building Consultants Inc.

Z:\2023 FBC Drawings\MasterGrain\FL-21852 R8\FL-21852.17-18.dwg

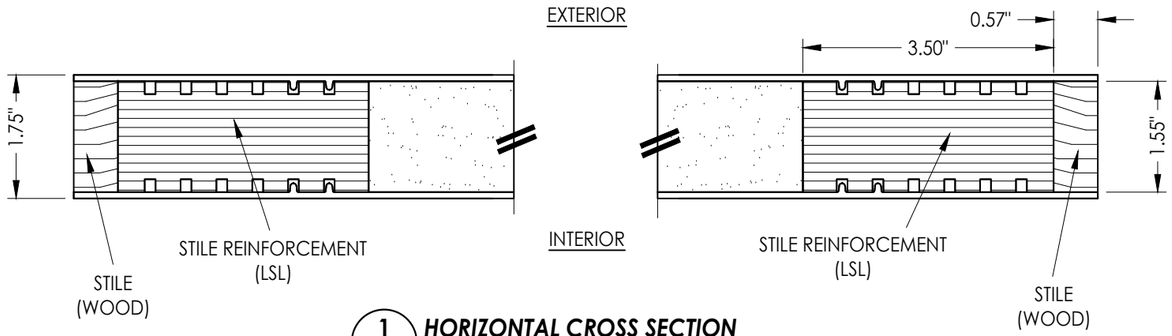

1/2 **HORIZONTAL CROSS SECTION**

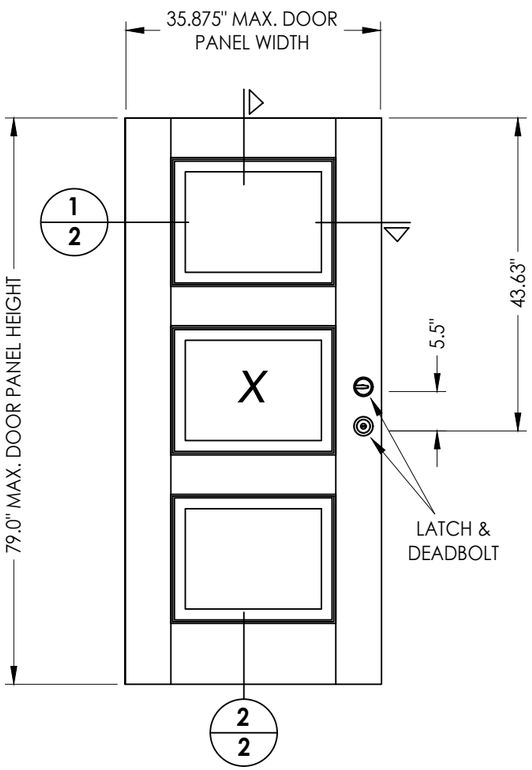

40 **DOOR PANEL**
Mastergrain

FIBERGLASS DOOR SKIN: 0.095" MIN. THK.
FOAM CORE: POLYURETHANE - 1.9 PCF MIN.

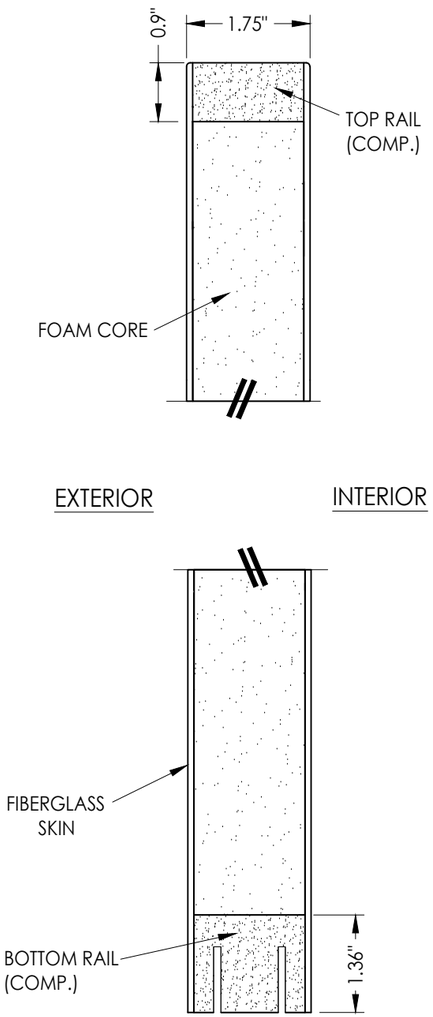

2/2 **VERTICAL CROSS SECTION**

Documents Prepared By:
Lyndon F. Schmidt
P.E. No. 43409
RW BUILDING CONSULTANTS, INC.
P.O. Box 230, Valrico, FL 33595
Phone No.: 813.659.9197
FBPE Registry No. 9813

PRODUCT: *MASTERGRAIN FIBERGLASS DOOR*

PART OR ASSEMBLY: *DOOR PANEL DETAILS*

NO.	DATE	REVISIONS	BY
3	7/01/23	UPDATE TO 8TH ED. (2023) FBC	LFS
2	7/08/20	UPDATE TO 7TH ED. (2020) FBC	LFS
1	10/03/17	UPDATE TO 6TH ED. (2017) FBC	JK

DATE: 02/09/17
SCALE: N.T.S.
DWG. BY: JK
CHK. BY: LFS
DRAWING NO.: FL-21852.17
SHEET 2 OF 9

© 2017 R.W. Building Consultants Inc.

Z:\2023 FBC Drawings\MasterGrain\FL-21852 R8\FL-21852.17-18.dwg

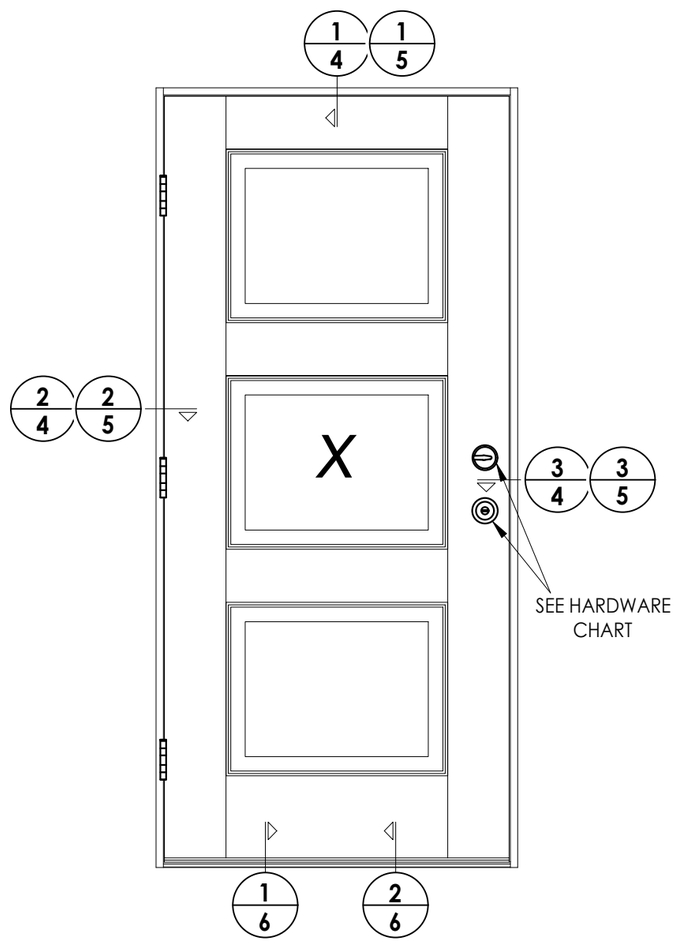

HARDWARE TABLE	
MANUFACTURER	**MODEL**
PAMEX	**KNOB:** **FLU600** **DEADBOLT:** **FD261**
KWIKSET	**KNOB:** **SIGNATURE SERIES** **DEADBOLT:** **SIGNATURE SERIES (980)**
SCHLAGE	**KNOB:** **F51** **DEADBOLT:** **B60N**
HOPPE	**MULTIPOINT:** **HLS™ ONE** **(3 pt. Manual Tongue)**

Documents Prepared By:
Lyndon F. Schmidt
P.E. No. 43409

BUILDING CONSULTANTS, INC.
P.O. Box 230, Valrico, FL 33595
Phone No.: 813.659.9197
FBPE Registry No. 9813

PRODUCT: *MASTERGRAIN FIBERGLASS DOOR*

PART OR ASSEMBLY: *ELEVATION*

REVISIONS

NO.	DATE		BY
3	7/01/23	UPDATE TO 8TH ED. (2023) FBC	LFS
2	7/08/20	UPDATE TO 7TH ED. (2020) FBC	LFS
1	10/03/17	UPDATE TO 6TH ED. (2017) FBC	JK

DATE: 02/09/17
SCALE: N.T.S.
DWG. BY: JK
CHK. BY: LFS
DRAWING NO.: FL-21852.17
SHEET 3 OF 9

© 2017 R.W. BUILDING CONSULTANTS INC.

Z:\2023 FBC Drawings\MasterGrain\FL-21852 R8\FL-21852.17-18.dwg

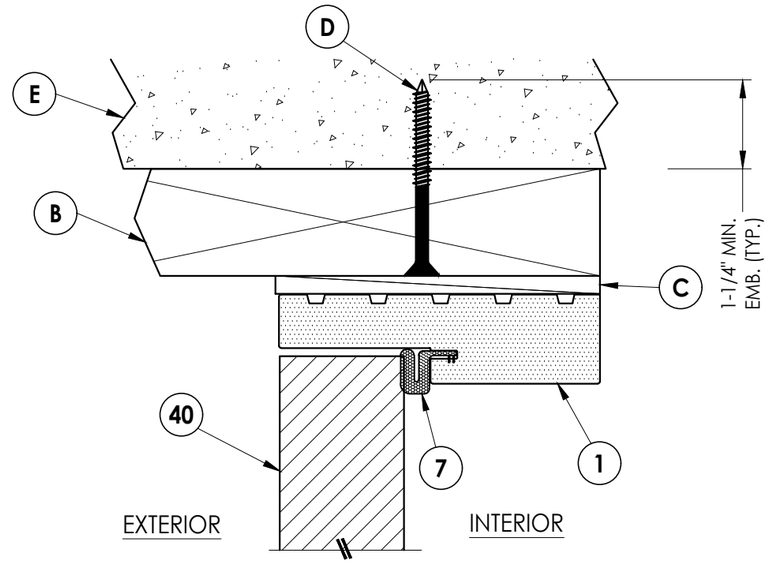

1/4 VERTICAL CROSS SECTION
Shown w/ 2X Buck
Outswing shown (Inswing similar)

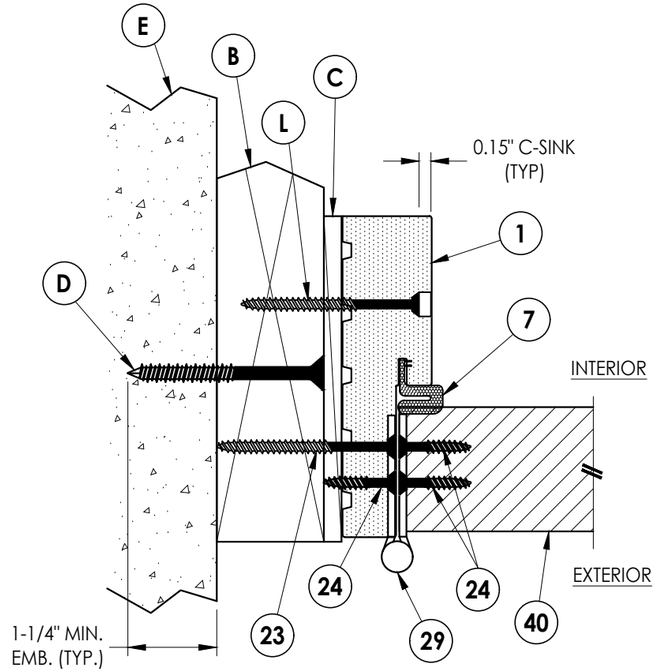

2/4 HORIZONTAL CROSS SECTION
Shown w/ 2X Buck
Outswing shown (Inswing similar)

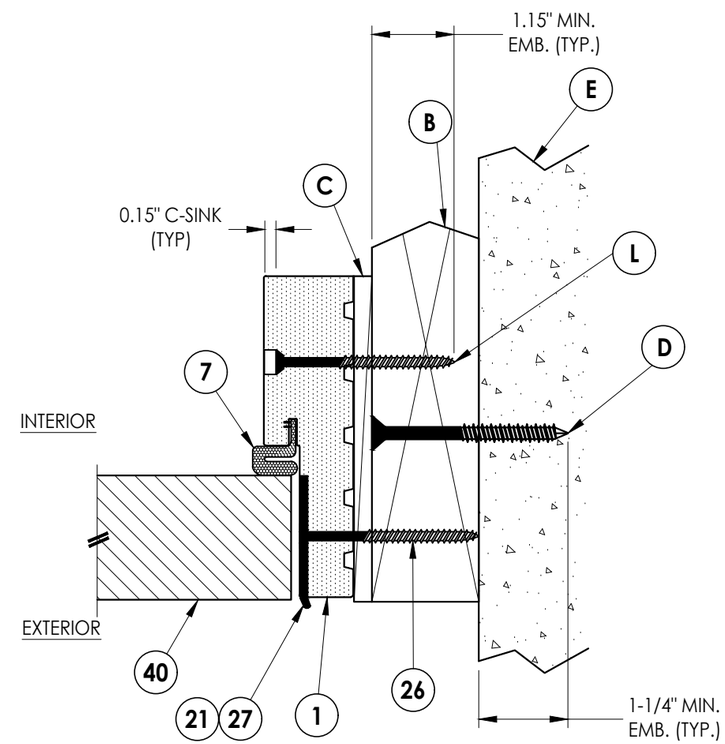

3/4 HORIZONTAL CROSS SECTION
Shown w/ 2X Buck
Outswing shown (Inswing similar)

Documents Prepared By:
Lyndon F. Schmidt
P.E. No. 43409

RW BUILDING CONSULTANTS, INC.
P.O. Box 230, Valrico, FL 33595
Phone No.: 813.659.9197
FBPE Registry No. 9813

PRODUCT: MASTERGRAIN FIBERGLASS DOOR

PART OR ASSEMBLY: HORIZONTAL & VERTICAL CROSS SECTIONS (2X BUCK)

REVISIONS

NO.	DATE		BY
3	7/01/23	UPDATE TO 8TH ED. (2023) FBC	LFS
2	7/08/20	UPDATE TO 7TH ED. (2020) FBC	LFS
1	10/03/17	UPDATE TO 6TH ED. (2017) FBC	JK

DATE: 02/09/17
SCALE: N.T.S.
DWG. BY: JK
CHK. BY: LFS
DRAWING NO.: FL-21852.17
SHEET 4 OF 9

© 2017 R.W. Building Consultants Inc.

Z:\2023 FBC Drawings\MasterGrain\FL-21852 R8\FL-21852.17-18.dwg

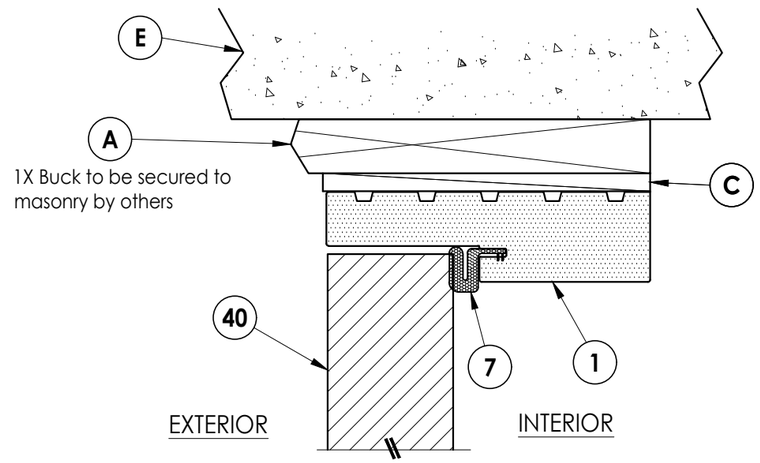

1/5 VERTICAL CROSS SECTION
Shown w/ 1X sub-buck
Outswing shown (Inswing similar)

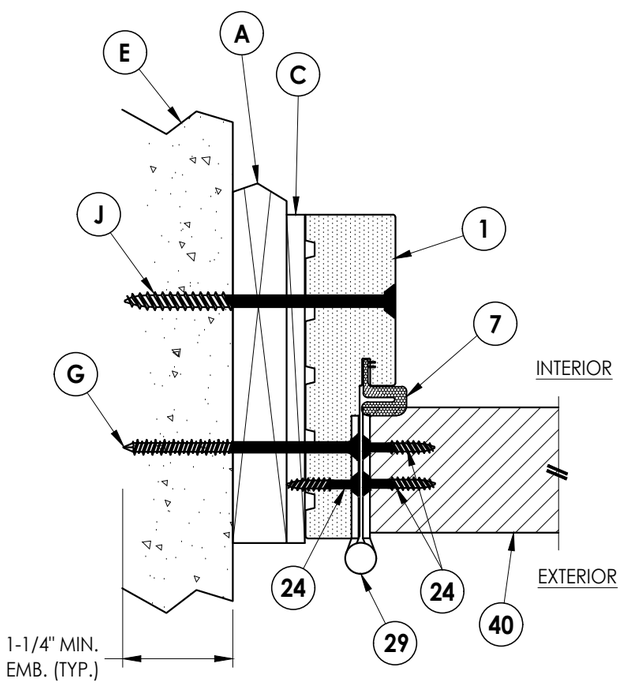

2/5 HORIZONTAL CROSS SECTION
Shown w/ 1X sub-buck
Outswing shown (Inswing similar)

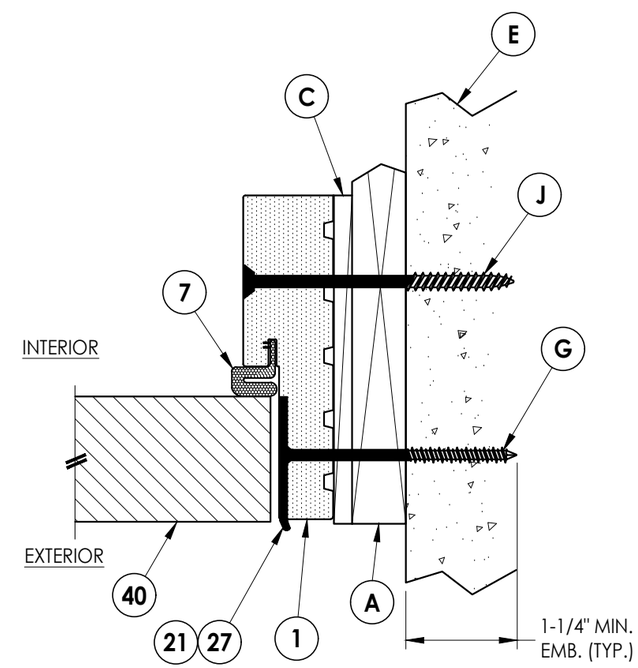

3/5 HORIZONTAL CROSS SECTION
Shown w/ 1X sub-buck
Outswing shown (Inswing similar)

Documents Prepared By:
Lyndon F. Schmidt
P.E. No. 43409

RW BUILDING CONSULTANTS, INC.
P.O. Box 230, Valrico, FL 33595
Phone No.: 813.659.9197
FBPE Registry No. 9813

PRODUCT: MASTERGRAIN FIBERGLASS DOOR

PART OR ASSEMBLY: HORIZONTAL & VERTICAL CROSS SECTIONS (1X BUCK)

REVISIONS

NO.	DATE		BY
3	7/01/23	UPDATE TO 8TH ED. (2023) FBC	LFS
2	7/08/20	UPDATE TO 7TH ED. (2020) FBC	LFS
1	10/03/17	UPDATE TO 6TH ED. (2017) FBC	JK

DATE: 02/09/17
SCALE: N.T.S.
DWG. BY: JK
CHK. BY: LFS
DRAWING NO.: FL-21852.17
SHEET 5 OF 9

© 2017 R.W. BUILDING CONSULTANTS INC.

Z:\2023 FBC Drawings\MasterGrain\FL-21852 R8\FL-21852.17-18.dwg

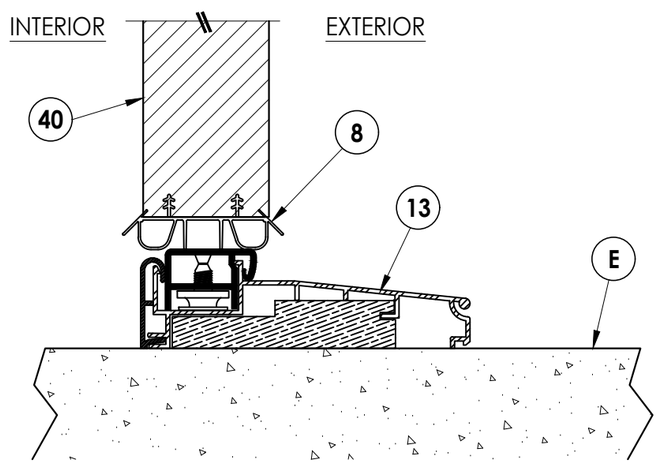

1/6 **VERTICAL CROSS SECTION**
Inswing Sill

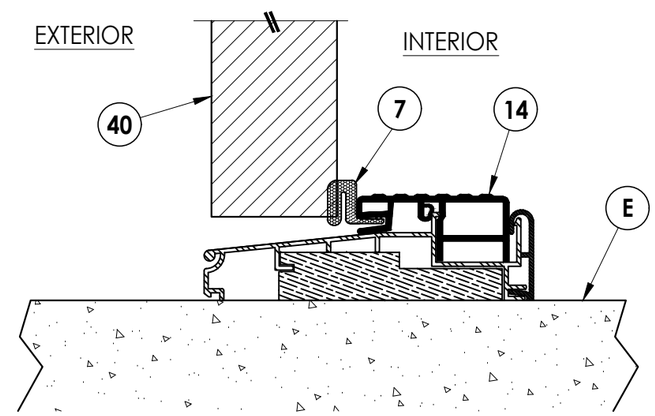

2/6 **VERTICAL CROSS SECTION**
Outswing Sill

Documents Prepared By:
Lyndon F. Schmidt
P.E. No. 43409

RW BUILDING CONSULTANTS, INC.
P.O. Box 230, Valrico, FL 33595
Phone No.: 813.659.9197
FBPE Registry No. 9813

PRODUCT: MASTERGRAIN FIBERGLASS DOOR

PART OR ASSEMBLY: VERTICAL CROSS SECTIONS (THRESHOLDS)

REVISIONS

NO.	DATE		BY
3	7/01/23	UPDATE TO 8TH ED. (2023) FBC	LFS
2	7/08/20	UPDATE TO 7TH ED. (2020) FBC	LFS
1	10/03/17	UPDATE TO 6TH ED. (2017) FBC	JK

DATE: 02/09/17
SCALE: N.T.S.
DWG. BY: JK
CHK. BY: LFS
DRAWING NO.: FL-21852.17
SHEET 6 OF 9

© 2017 R.W. Building Consultants Inc.

Z:\2023 FBC Drawings\MasterGrain\FL-21852 R8\FL-21852.17-18.dwg

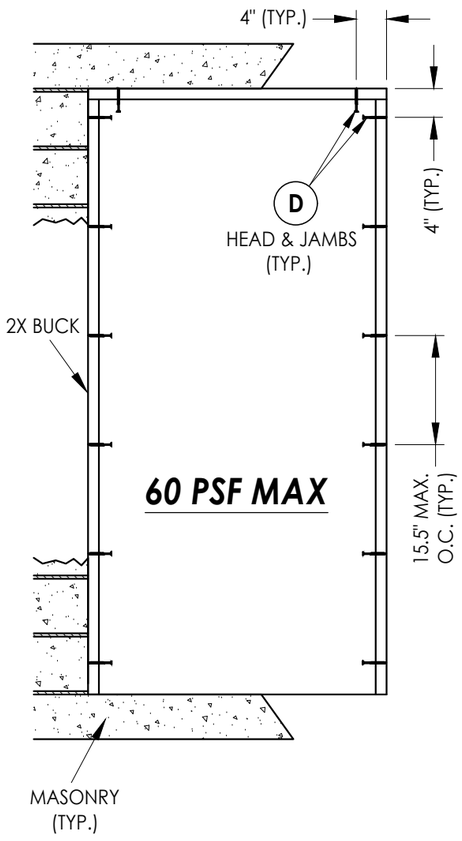

2X BUCK ANCHORING

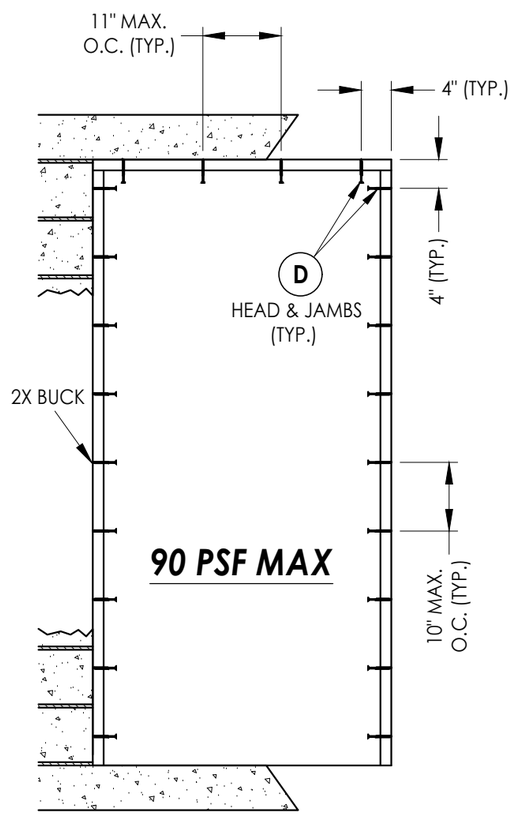

2X BUCK ANCHORING

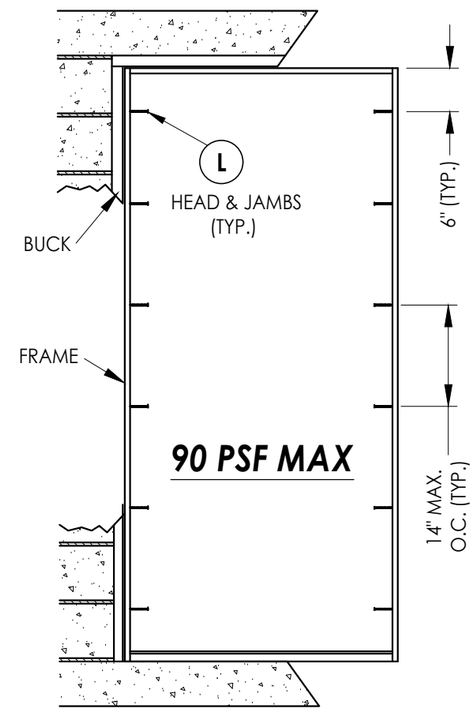

FRAME ANCHORING

2X BUCK CONSTRUCTION

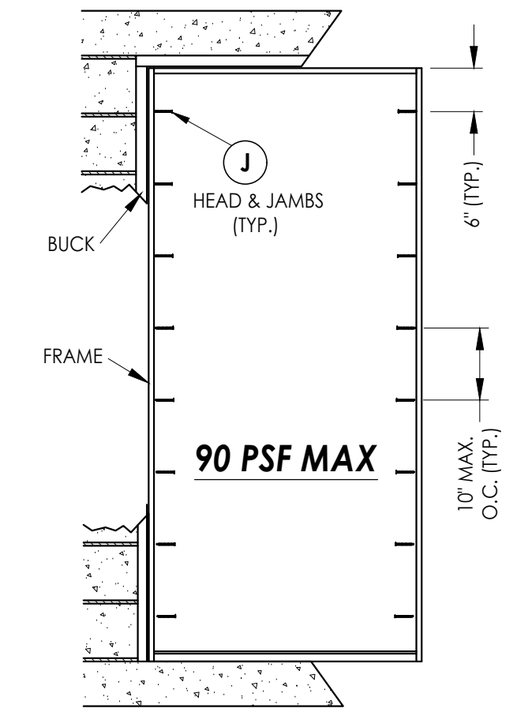

FRAME ANCHORING

1X BUCK CONSTRUCTION

NOTE:
1. ALL FRAME CORNERS SECURED WITH (3) #8 X 2-1/2" FH DEEP THREAD WOOD SCREWS @ HEAD & SILL.

Documents Prepared By:
Lyndon F. Schmidt
P.E. No. 43409

RW BUILDING CONSULTANTS, INC.
P.O. Box 230, Valrico, FL 33595
Phone No.: 813.659.9197
FBPE Registry No. 9813

PRODUCT: MASTERGRAIN FIBERGLASS DOOR

PART OR ASSEMBLY: BUCK & FRAME ANCHORING

REVISIONS

NO.	DATE		BY
3	7/01/23	UPDATE TO 8TH ED. (2023) FBC	LFS
2	7/08/20	UPDATE TO 7TH ED. (2020) FBC	LFS
1	10/03/17	UPDATE TO 6TH ED. (2017) FBC	JK

DATE: 02/09/17
SCALE: N.T.S.
DWG. BY: JK
CHK. BY: LFS
DRAWING NO.: FL-21852.17
SHEET 7 OF 9

© 2017 R.W. BUILDING CONSULTANTS INC.

Z:\2023 FBC Drawings\MasterGrain\FL-21852 R8\FL-21852.17-18.dwg

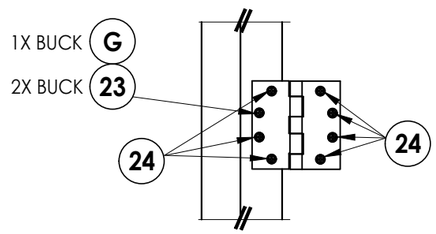

HINGE DETAIL

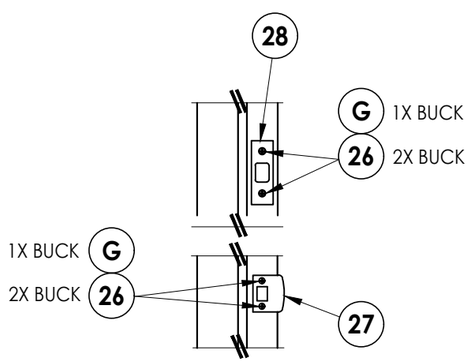

LATCH & DEADBOLT DETAIL

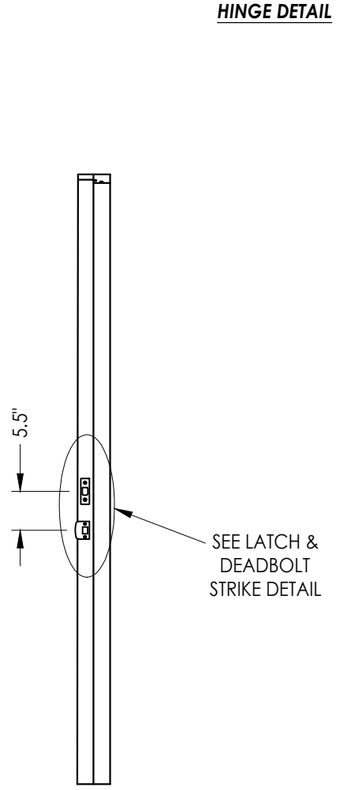

STRIKE JAMB
Latch and Deadbolt

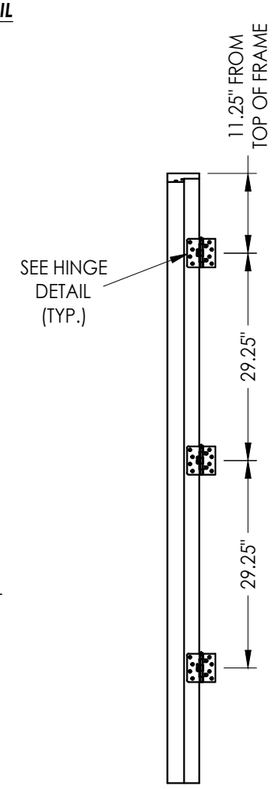

HINGE JAMB

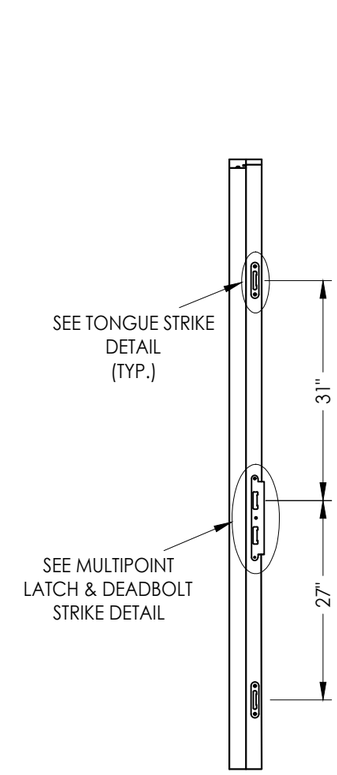

STRIKE JAMB
Multipoint Lock

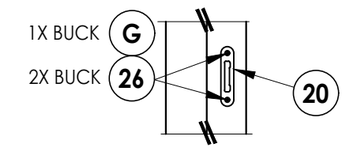

TONGUE STRIKE DETAIL

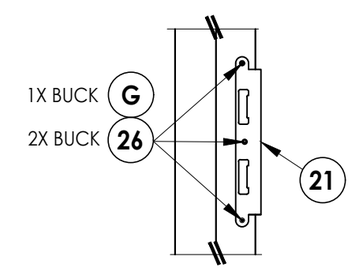

MULTIPOINT LATCH & DEADBOLT STRIKE DETAIL

LATCH & DEADBOLT HARDWARE DETAILS

MULTIPOINT LOCK HARDWARE DETAILS

Documents Prepared By:
Lyndon F. Schmidt
P.E. No. 43409

BUILDING CONSULTANTS, INC.
P.O. Box 230, Valrico, FL 33595
Phone No.: 813.659.9197
FBPE Registry No. 9813

PRODUCT: MASTERGRAIN FIBERGLASS DOOR

PART OR ASSEMBLY: HARDWARE DETAILS

REVISIONS

NO.	DATE	BY
3	7/01/23	UPDATE TO 8TH ED. (2023) FBC	LFS
2	7/08/20	UPDATE TO 7TH ED. (2020) FBC	LFS
1	10/03/17	UPDATE TO 6TH ED. (2017) FBC	JK

DATE: 02/09/17
SCALE: N.T.S.
DWG. BY: JK
CHK. BY: LFS
DRAWING NO.: FL-21852.17
SHEET 8 OF 9

© 2017 R.W. BUILDING CONSULTANTS INC.

Z:\2023 FBC Drawings\MasterGrain\FL-21852 R8\FL-21852.17-18.dwg

BILL OF MATERIALS

ITEM #	DESCRIPTION	MATERIAL
A	1X BUCK (SG >= 0.42)	WOOD
B	2X BUCK (SG >= 0.42)	WOOD
C	1/4" MAX. SHIM SPACE	-
D	1/4" X 2-3/4" PFH DeWALT OR ITW CONCRETE SCREW	STEEL
E	MASONRY - 3,000 PSI MIN. CONCRETE CONFORMING TO ACI 301 OR HOLLOW BLOCK CONFORMING TO ASTM C90	CONCRETE
G	3/16" X 3-1/4" PFH ITW CONCRETE SCREW	STEEL
J	1/4" X 3-3/4" PFH DeWALT OR ITW CONCRETE SCREW	STEEL
L	#10 X 2-1/2" PFH WOOD SCREW (1.15" MIN. EMBEDMENT)	STEEL
1	COMPOSITE JAMB	COMP
7	WEATHERSTRIP	FOAM
8	SWEEP	VINYL
13	INSWING ADJUSTABLE THRESHOLD	ALUM/COMP
14	OUTSWING BUMP THRESHOLD	ALUM/COMP
20	MULTIPOINT TONGUE STRIKE PLATE	STEEL
21	MULTIPOINT LATCH & DEADBOLT STRIKE PLATE	STEEL
23	#12 X 2-1/2" PFH WOOD SCREW	STEEL
24	#12 x 1" PFH WOOD SCREW	STEEL
26	#8 X 2-1/2" PFH WOOD SCREW	STEEL
27	LATCH STRIKE PLATE	STEEL
28	DEADBOLT STRIKE PLATE	STEEL
29	4.5" X 4.5" HINGE	STEEL
40	DOOR PANEL	-

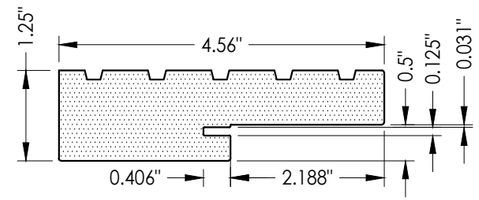

1 **COMPOSITE JAMB**
WORLDWIDE

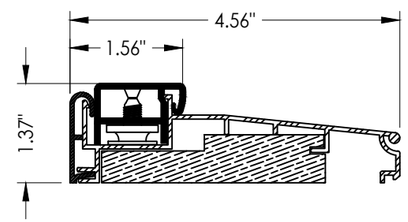

13 **INSWING THRESHOLD**
WORLDWIDE

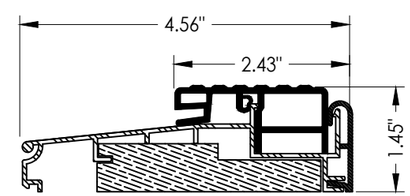

14 **OUTSWING THRESHOLD**
WORLDWIDE

CONCRETE ANCHOR NOTES:

1. *Concrete anchor locations at the corners may be adjusted to maintain the min. edge distance to mortar joints.*
2. *Concrete anchor locations noted as "MAX. ON CENTER" must be adjusted to maintain the min. edge distance to mortar joints, additional concrete anchors may be required to ensure the "MAX. ON CENTER" dimension are not exceeded.*
3. *Concrete anchor table:*

ANCHOR TYPE	ANCHOR SIZE	MIN. EMBEDMENT	MIN. CLEARANCE TO MASONRY EDGE	MIN. CLEARANCE TO ADJACENT ANCHOR
ITW TAPCON®	1/4"	1-1/4"	2"	4"
DeWALT ULTRACON®+	1/4"	1-1/4"	1"	4"
ITW TAPCON®	3/16"	1-1/4"	3"	1-1/2"

WOOD SCREW INSTALLATION NOTES:

1. *Maintain a minimum 5/8" edge distance, 1" end distance, & 1" o.c. spacing of wood screws to prevent the splitting of wood.*

Documents Prepared By:
Lyndon F. Schmidt
P.E. No. 43409

RW BUILDING CONSULTANTS, INC.
P.O. Box 230, Valrico, FL 33595
Phone No.: 813.659.9197
FBPE Registry No. 9813

PRODUCT: MASTERGRAIN FIBERGLASS DOOR

PART OR ASSEMBLY: BILL OF MATERIALS AND COMPONENTS

REVISIONS

NO.	DATE			BY
3	7/01/23	UPDATE TO 8TH ED. (2023)	FBC	LFS
2	7/08/20	UPDATE TO 7TH ED. (2020)	FBC	LFS
1	10/03/17	UPDATE TO 6TH ED. (2017)	FBC	JK

DATE: 02/09/17
SCALE: N.T.S.
DWG. BY: JK
CHK. BY: LFS
DRAWING NO.: FL-21852.17
SHEET 9 OF 9

© 2017 R.W. Building Consultants Inc.

Z:\2023 FBC Drawings\MasterGrain\FL-21852 R8\FL-21852.17-18.dwg